MICROCHIP

Next Generation Peripherals For 8-bit PIC® Microcontrollers

Unique integrated peripherals for 8-bit PIC microcontrollers.

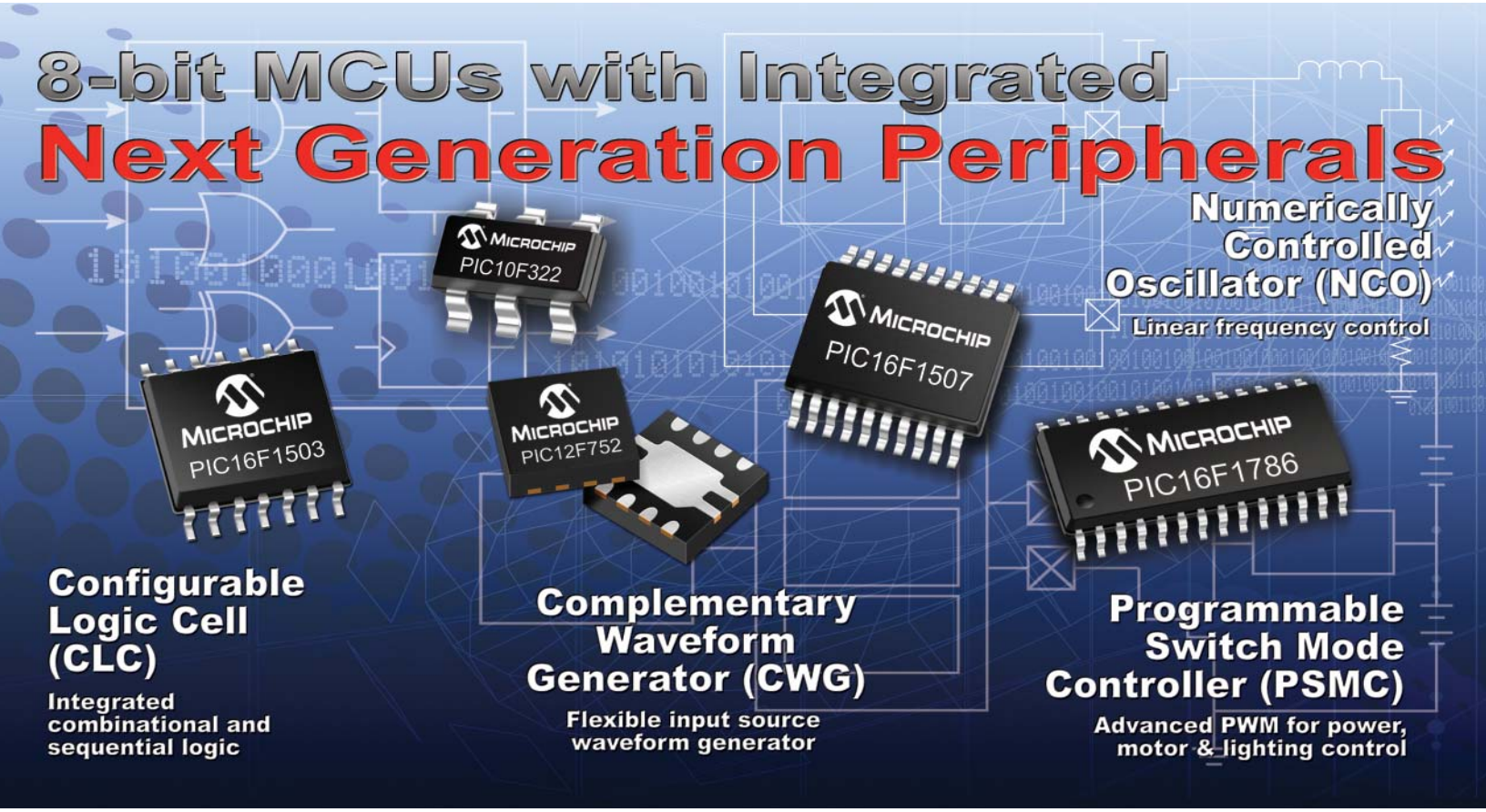

www.microchip.com/8bit

8-bit Peripheral Highlights

Overview

Microchip is the leader in 8-bit microcontrollers by continually investing and expanding upon the PIC® microcontroller line-up. Emphasis is persistently focused on reducing costs while developing products with a strong mix of peripherals such as LCD drive, PWM, ADC, comparators, timers and communication. Beyond standard peripherals, Microchip is constantly bringing additional value to PIC microcontrollers by developing unique and exclusive peripherals. These unique peripherals allow embedded engineers to simplify their designs and create ever more creative applications and products. This innovation is demonstrated by some of the following PIC microcontroller integrated peripherals.

Configurable Logic Cell (CLC) – *Easily create custom combination and sequential logic.*

Key Features

- User configurable real time logic control
  - CLC configuration GUI for quick turn development
- Combinational Logic Functions
  - AND/OR/XOR/NOT/NAND/NOR/XNOR
- State Functions/Clock
  - D Flip-Flop, JK Flip-Flop D Latch, SR Latch
- Input sources
  - Pins
  - Peripherals
- Output available to:
  - External pins
  - Other peripherals
- Operation while in Sleep

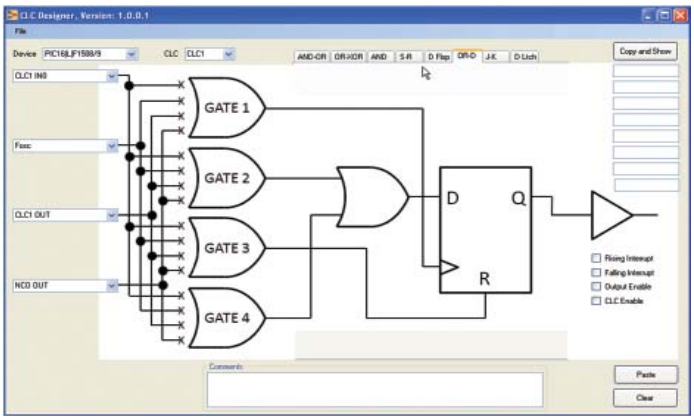

Benefits

- Increases on chip interconnection of peripherals and I/O
- Integrates hardware functions and saves board space
- Software control of Combinational/Sequential Logic
- Saves program code space and frees up CPU cycles

Example Applications

- Data Modulation
- Power Sequencing
- Manchester/IrDA Encoder
- Switch Mode Power Supply
- Event Sequencing
- Conditional Signaling
- General Purpose Logic
- Customizable Circuitry
- Smart System Control
- Boost Regulator with Feedback

Example: Phase Shifted Data Modulator

Combinational and Sequential logic can easily be designed using on-chip hardware.

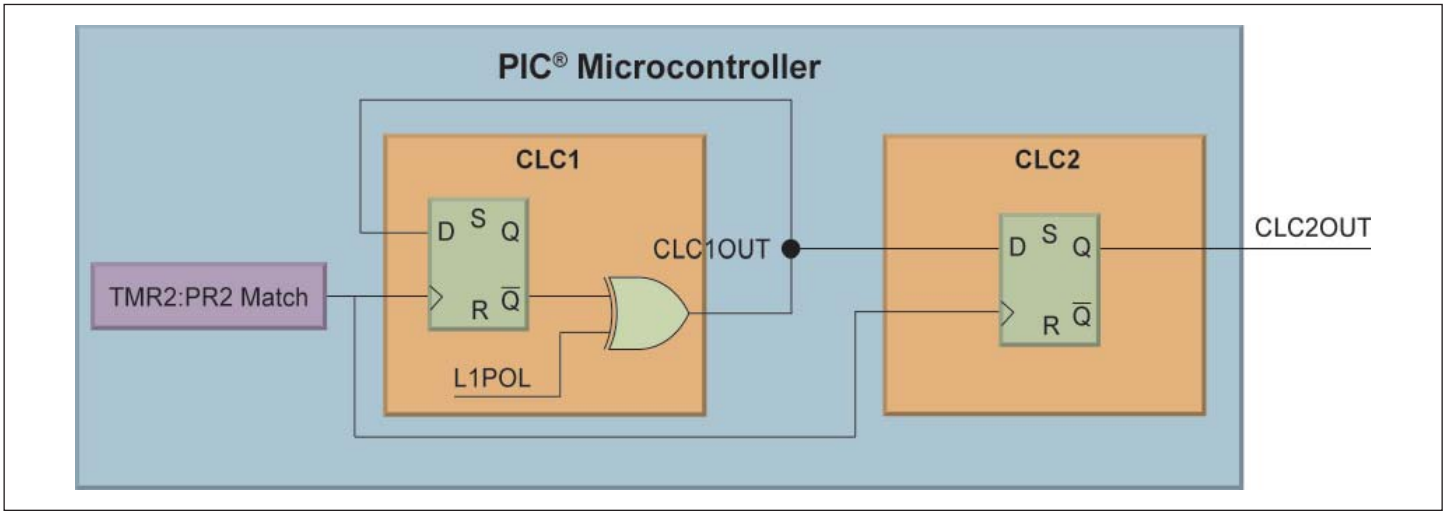

Available on the following PIC microcontrollers: PIC10F32X, PIC1XF150X.

8-bit Peripheral Highlights

Complementary Waveform Generator (CWG)
Complementary Output Generator (COG)

Complementary waveforms with enhanced capabilities.

Key Features

- Provides non-overlapping complementary waveform
- Various input sources inclusive of:
  - Comparators, PWM, CLC, NCO
- Blanking control for transient filtering ❶ (available with COG only in PIC12F752)
- Phase control for output delay ❷ (available with COG only in PIC12F752)
- Independent rise and fall ❸/❹
- Dead band control
- Auto shutdown/restart
- Polarity control

Benefits

- Works with multiple peripherals
- Fewer components and less space
- Lower power
- Improved switching efficiencies

Example Applications

- Switch Mode Power Supplies
- LED/Fluorescent Lighting
- Battery Charger
- Motor Drive
- Power Factor Correction
- Class D Audio Amplifiers

Example: Half Bridge Circuit Using CWG or COG

Use CWG's or COG's advanced features to provide dead-band control, auto shut down.

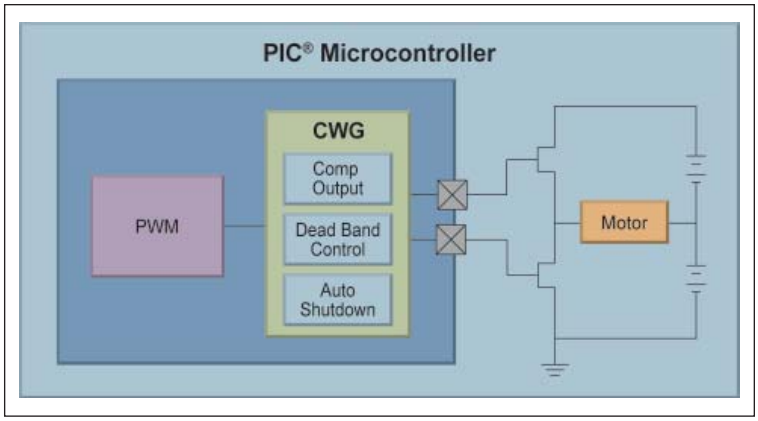

Example: LED Buck Converter

- *CWG or COG frequency is determined by frequency of PWM*
- *CWG or COG provide dead-band control for the synchronous switches*
- *Use CWG's or COG's advanced features to provide auto shut down, polarity control*

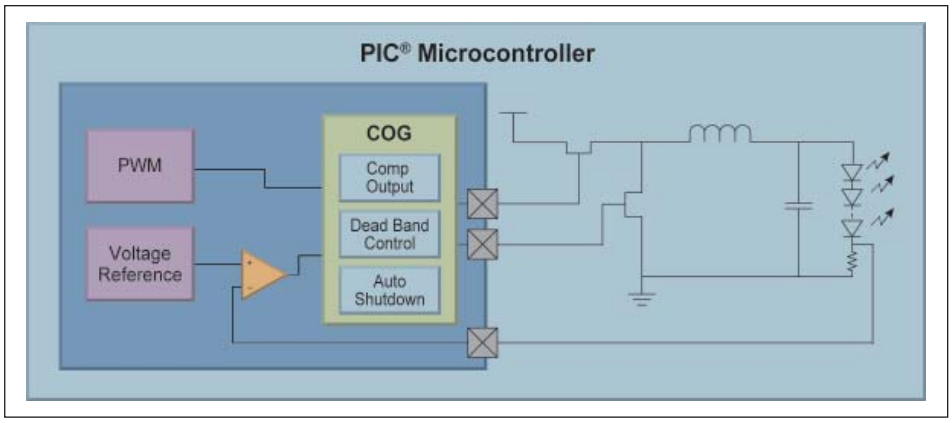

Complementary Waveform Generator (CWG)/Complementary Output Generator (COG)

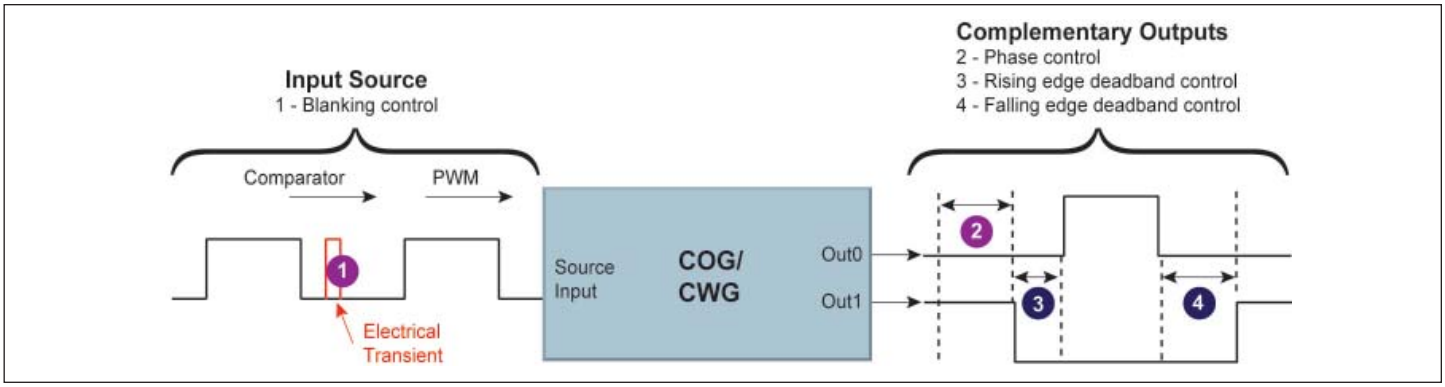

Available on the following PIC microcontrollers: PIC10F32X, PIC12F752, PIC1XF150X.

8-bit Peripheral Highlights

Numerically Controlled Oscillator (NCO) – *Oscillator capabilities with true linear frequency control.*

Key Features

- Up to 20-bit frequency resolution
- Independent 16 MHz clock input
- 16b numeric frequency control
  - 500 kHz max output
  - 15 Hz per step
- 2 output modes
  - Fixed 50% Duty Cycle (FDC) 1
  - Pulse Frequency Modulation (PFM) 2

Benefits

- True linear frequency control
- Increased frequency resolution

Example Applications

- Fluorescent and LED Lighting Control
- Neon Lighting Control
- Lighting Ballast
- Power Supplies
- Motor Drivers
- Modems
- Class D Audio Amplifiers
- Ultrasonic Ranging

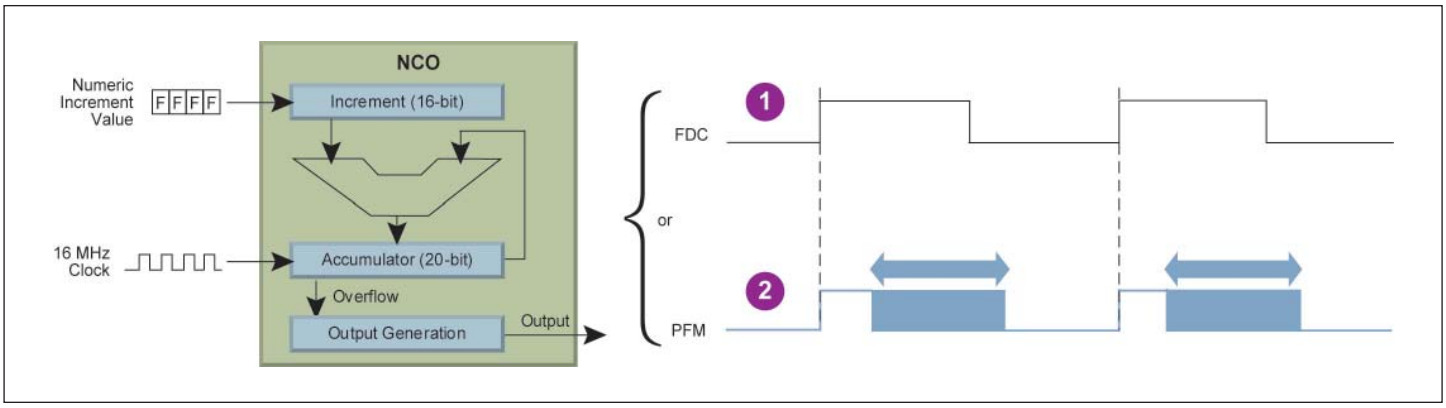

Example: Fluorescent Lighting Control

- *Use the NCO to create linear frequencies for start-up and dimming control*
- *Lower power and extend life of fluorescent bulb*

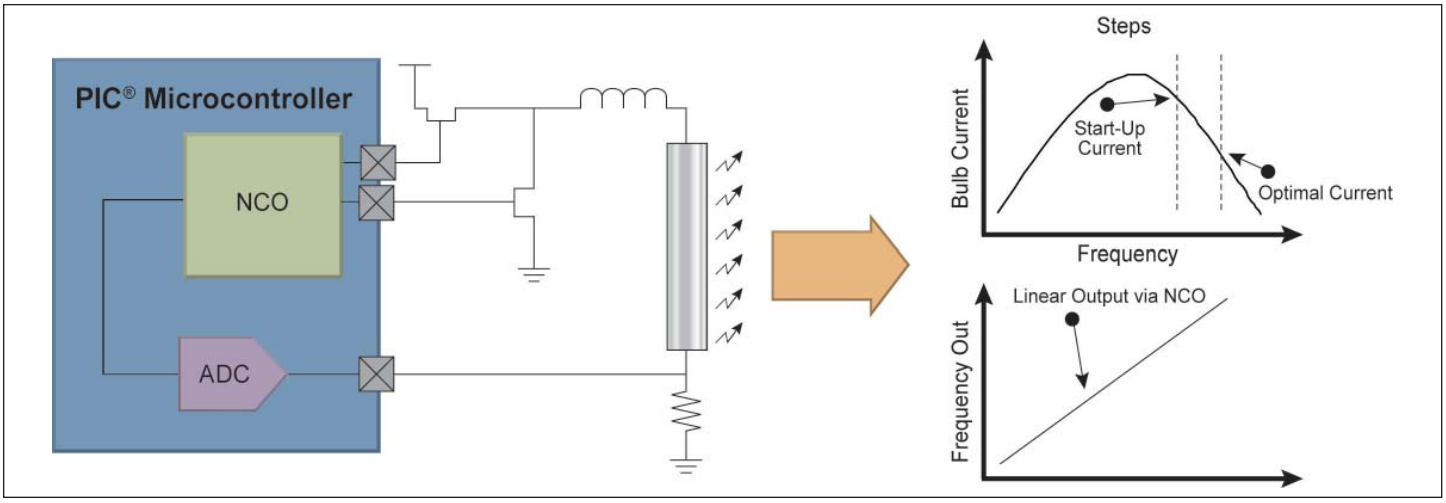

Available on the following PIC microcontrollers: PIC10F32X, PIC1XF150X.

8-bit Peripheral Highlights

Programmable Switch Mode Controller (PSMC) – *Advanced PWM capabilities for power supplies, motor and lighting control.*

Key Features

- Various clock sources: external, system clock, independent 64 MHz
- Various input sources: comparators, external pins
- Blanking control for transient filtering (1)
- Single 16-bit PWM
  – with up to 6 steerable outputs
- Complementary 16-bit PWM
  – with up to 3 steerable output pairs
- Independent rising/falling edge control (2)
- Dead band with independent rise and fall control (3)/(4)
- Polarity control/auto shutdown and restart
- Flexible PWM output modes:
  – Push/pull, pulse skipping, 3-phase, fixed duty cycle, brushed DC with forward/reverse
- Output gating – externally controlled activate/deactivate

Benefits

- Customizable high speed PWM with increased resolution and control
- Simplifies the implementation of applications such as: motor control, lighting and power supplies

Example Applications

- Power Supplies
- DC/DC Converters (Power Bricks)
- Power Factor Correction
- LCD Backlighting
- LED Lighting
- Automotive Head and Tail Lamps
- High Intensity Discharge (HID) Lighting
- Lamp Ballasts
- Signal Conditioning
- Motor Control
  – 3-phase Motors, BLDC, AC Induction
- Sensors – Medical, Temperature, Pressure
- Battery Monitoring,
- Advanced Battery Charging
- General Purpose Applications Requiring High Resolution PWM

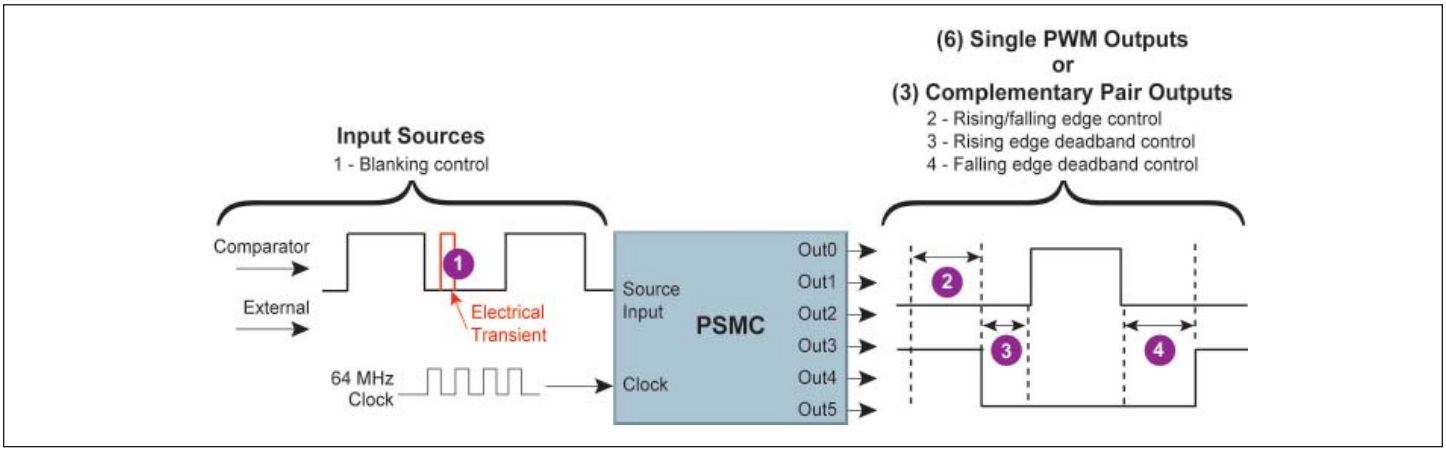

Example: LED Buck Converter

- *Increased frequency control with dead-band control for the synchronous switches*
- *Provides auto shut down, polarity control and increased duty cycle performance*

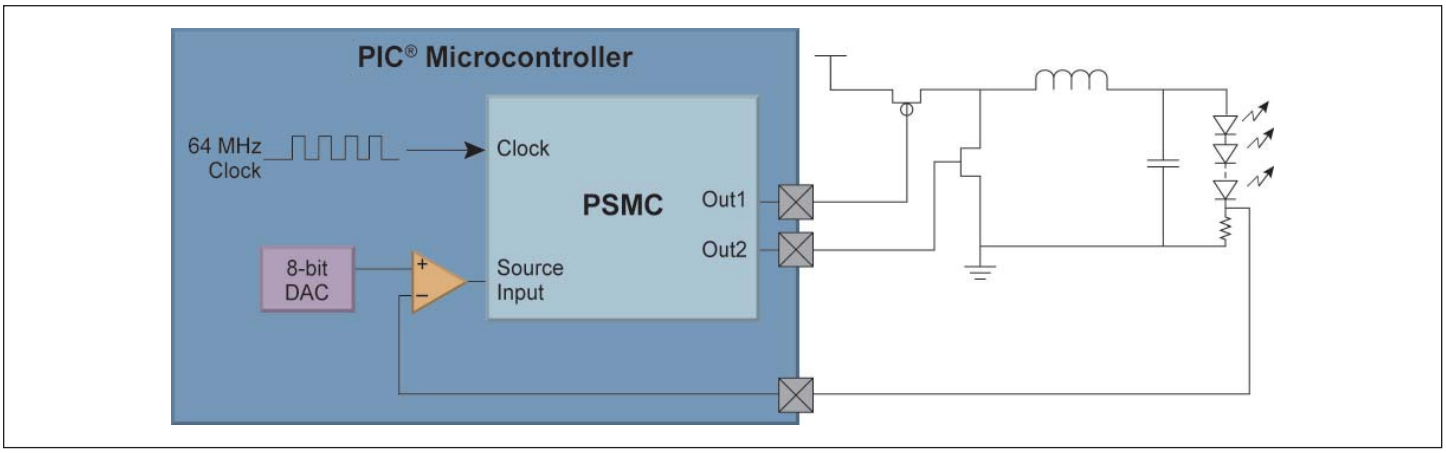

Available on the following PIC microcontrollers: PIC16F178X.

8-bit Peripheral Highlights

Temperature Indicator – *Integrated temperature measurements for any application.*

Key Features

- Measures between -40°C and 85°C
- Internally connected to ADC
  - ADC result changes with temperature
- Reference Application Note: AN1333

Benefits

- Low cost temp measurements for any application
- No external hardware required
- Improve RTC accuracy over temp
  - Allows the use of lower cost crystals
- Improved voltage reference over temp

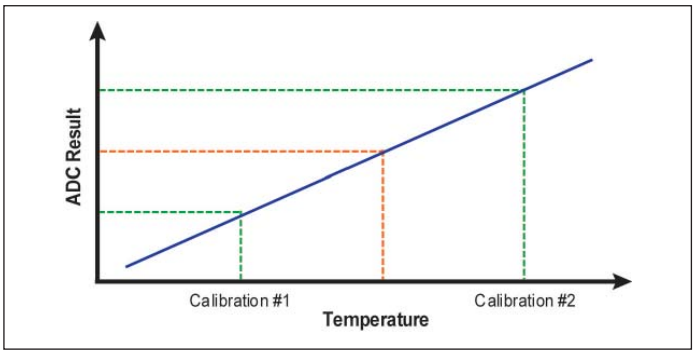

Available on the following PIC microcontrollers: PIC10F32X, PIC16F72X, PIC1XF15XX, PIC16(L)F19XX, PIC16F182X, PIC16F178X, PIC18FXXK22.

Example Applications

- Mobile Phones
- Power Tools
- Home Appliances
- Any application requiring environmental temperature measurements
- Auto-shutdown to prevent system overheat
- Any application requiring oscillator accuracy over temp

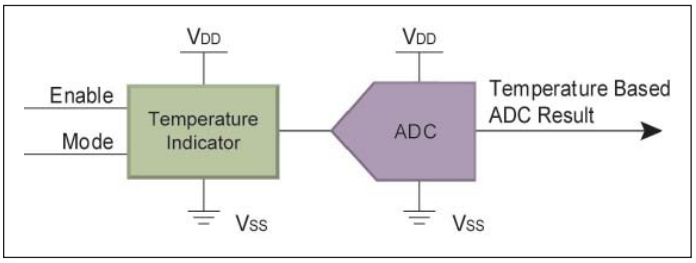

Example: Crystal Oscillator with Temperature Compensation

Enable the use of less expensive crystals while maintaining accuracy over temp.

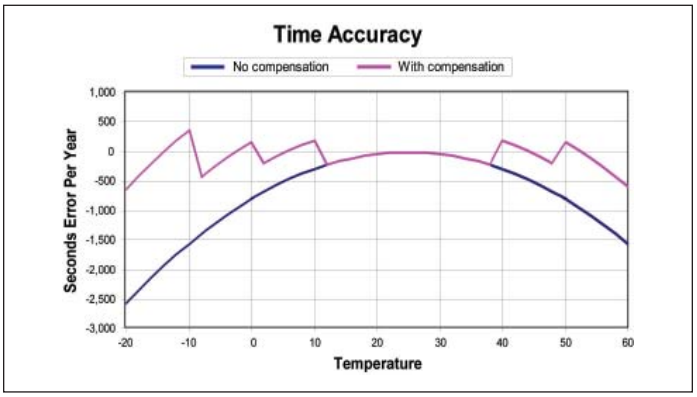

Data Signal Modulator (DSM) – *Easily create custom communication protocols.*

Key Features

- Modulate any input signal over a carrier frequency
- Create custom digital bit patterns
- Sources can be modulated using:
  - An external pin
  - Clock reference
  - PWM
  - UART/SPI/I^{2}C™
  - A register bit
  - Internal comparators

Benefits

- Easily create IrDA streams or ASK, FSK or PSK transmissions

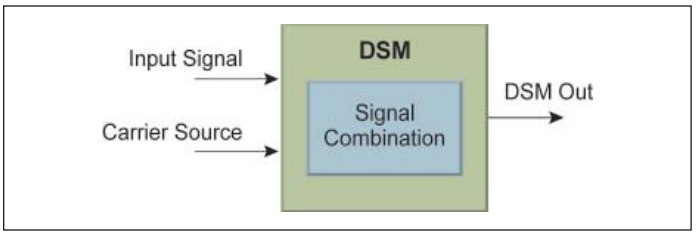

Example Applications

- Amplitude Shift Keying (ASK)
- Frequency Shift Keying (FSK)
- Phase Shift Keying (PSK)
- Modems
- IrDA stream
- Custom Communication Interface

Available on the following PIC microcontrollers: PIC16F182X/184X.

8-bit Peripheral Highlights

Timer 1 Gate (T1G) – *Measures the duration of any input signal.*

Key Features

- Start/stop clock input based on control signal of 16 bit Timer 1 (TMR1)
- Gating sources:
  - Comparator outputs
  - Timer 0 (TMR0)
  - External input (T1G pin)
- Clocking sources
  - Internal oscillator
  - Internal oscillator divide by 4
  - Timer 1 clock
- Pulse acquisition modes with acquisition complete interrupt flag
  - Rising to rising edge 1
  - Falling to falling edge 2
  - Falling to rising edge 3
  - Rising to falling edge 4
  - Interrupt on completion

Benefits

- Measure pulse width of any internal or external signal
- Requires no external components

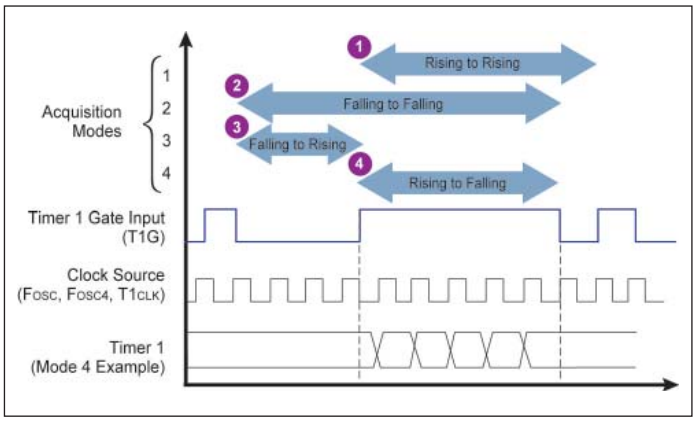

Example Applications

- Delta Sigma ADC
- PWM Decode
- SMPS Current Sharing
- Pulse Frequency Measurements
- Time Frequency Measurements

Available on the following PIC microcontrollers: PIC12F15XX, PIC16F61X Family, PIC16F690 Family, PIC16F72X, PIC16F18XX, PIC16F88X, PIC16F19XX, PIC18FXXK22.

Set Reset Latch (SR Latch) – *Does anything a 555 timer can do and more.*

Key Features

- Internally tied to comparator
- Multiple set/reset input options
  - Comparator output
  - Software control
  - External pin
  - Programmable clock
- Latching output internal or external

Benefits

- Do anything you can do with a 555 timer
- Implement low cost wave forms and oscillators
- Few external components

Note: SR Latch capability is integrated into CLC Module

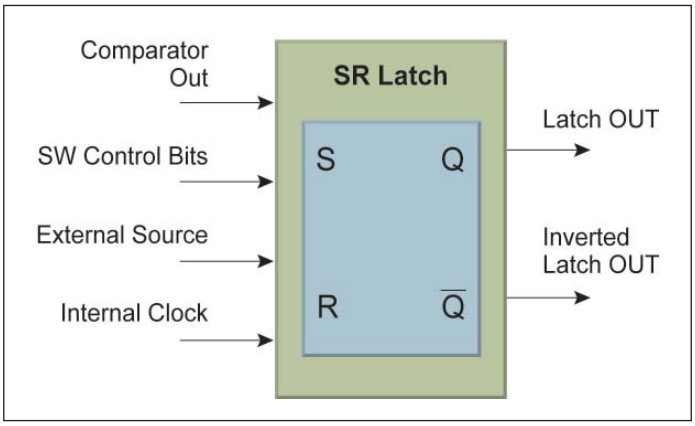

Example Applications

- Amplitude Shift Keying (ASK)
- Waveform/Pulse Generators
- Switching Power Supplies Controller
- Digital Controlled Voltage Controlled Oscillators
- Oscillators
- AC Lamp Dimmer
- PWM Motor Control
- Tone Generators
- Phase Comparators

Available on the following PIC microcontrollers: PIC16F61X, PIC16F690 Family, PIC16F18XX, PIC16F88X, PIC16F19XX, PIC18FXXK22, PIC18F1XK50.

Support

Microchip is committed to supporting its customers in developing products faster and more efficiently. We maintain a worldwide network of field applications engineers and technical support ready to provide product and system assistance. In addition, the following service areas are available at **www.microchip.com:**

- **Support** link provides a way to get questions answered fast: **http://support.microchip.com**
- **Sample** link offers evaluation samples of any Microchip device: **http://sample.microchip.com**
- **Forum** link provides access to knowledge base and peer help: **http://forum.microchip.com**
- **Buy** link provides locations of Microchip Sales Channel Partners: **www.microchip.com/sales**

Training

If additional training interests you, then Microchip can help. We continue to expand our technical training options, offering a growing list of courses and in-depth curriculum locally, as well as significant online resources – whenever you want to use them.

- Technical Training Centers: **www.microchip.com/training**
- MASTERs Conferences: **www.microchip.com/masters**
- Worldwide Seminars: **www.microchip.com/seminars**
- eLearning: **www.microchip.com/webseminars**
- Resources from our Distribution and Third Party Partners **www.microchip.com/training**

Sales Office Listing

AMERICAS

Atlanta
Tel: 678-957-9614
Boston
Tel: 774-760-0087
Chicago
Tel: 630-285-0071
Cleveland
Tel: 216-447-0464
Dallas
Tel: 972-818-7423
Detroit
Tel: 248-538-2250
Indianapolis
Tel: 317-773-8323
Los Angeles
Tel: 949-462-9523
Santa Clara
Tel: 408-961-6444
Toronto
Mississauga, Ontario
Tel: 905-673-0699

EUROPE

Austria - Wels
Tel: 43-7242-2244-39
Denmark - Copenhagen
Tel: 45-4450-2828
France - Paris
Tel: 33-1-69-53-63-20
Germany - Munich
Tel: 49-89-627-144-0
Italy - Milan
Tel: 39-0331-742611
Netherlands - Drunen
Tel: 31-416-690399
Spain - Madrid
Tel: 34-91-708-08-90
UK - Wokingham
Tel: 44-118-921-5869

ASIA/PACIFIC

Australia - Sydney
Tel: 61-2-9868-6733
China - Beijing
Tel: 86-10-8569-7000
China - Chengdu
Tel: 86-28-8665-5511
China - Chongqing
Tel: 86-23-8980-9588
China - Hangzhou
Tel: 86-571-2819-3187
China - Hong Kong SAR
Tel: 852-2401-1200
China - Nanjing
Tel: 86-25-8473-2460
China - Qingdao
Tel: 86-532-8502-7355
China - Shanghai
Tel: 86-21-5407-5533
China - Shenyang
Tel: 86-24-2334-2829
China - Shenzhen
Tel: 86-755-8203-2660
China - Wuhan
Tel: 86-27-5980-5300
China - Xiamen
Tel: 86-592-2388138
China - Xian
Tel: 86-29-8833-7252
China - Zhuhai
Tel: 86-756-3210040

ASIA/PACIFIC

India - Bangalore
Tel: 91-80-3090-4444
India - New Delhi
Tel: 91-11-4160-8631
India - Pune
Tel: 91-20-2566-1512
Japan - Yokohama
Tel: 81-45-471- 6166
Korea - Daegu
Tel: 82-53-744-4301
Korea - Seoul
Tel: 82-2-554-7200
Malaysia - Kuala Lumpur
Tel: 60-3-6201-9857
Malaysia - Penang
Tel: 60-4-227-8870
Philippines - Manila
Tel: 63-2-634-9065
Singapore
Tel: 65-6334-8870
Taiwan - Hsin Chu
Tel: 886-3-5778-366
Taiwan - Kaohsiung
Tel: 886-7-536-4818
Taiwan - Taipei
Tel: 886-2-2500-6610
Thailand - Bangkok
Tel: 66-2-694-1351

8/2/11

MICROCHIP

www.microchip.com

Microchip Technology Inc.
2355 W. Chandler Blvd.
Chandler, AZ 85224-6199

Microcontrollers • Digital Signal Controllers • Analog • Serial EEPROMs

The Microchip name and logo, the Microchip logo, MPLAB and PIC are registered trademarks and PICDEM, PICkit and PICtail are trademarks of Microchip Technology Incorporated in the U.S.A. and other countries. All other trademarks mentioned herein are property of their respective companies. © 2011, Microchip Technology Incorporated, All Rights Reserved. Printed in the U.S.A. 9/11

DS41565C